ISSN 2395-1621

Design and Develop Steering Controlled Headlight Mechanism

#1Yogesh Kshirsagar, #2Amol Khobragade, #3Akshay Kole, #4Vinod Nigade, #5Prof.AV.Dumbre

1kshirsagar3558@gmail.com,
2amolkhobragade641@gmail.com,
3akshaykole11@gmail.com,
4vinodnigade2015@gmail.com,
5ajitdumbre009@gmail.com

#1234B.E. Students, Department Of Mechanical Engineering,
#5Assistant Prof. Department Of Mechanical Engineering,

PDEA'S College of Engineering, Manjari.

ABSTRACT

The aim is to design and develop a "Steering Controlled Headlight Mechanism" which acts as directional headlights. This is done by connecting steering and headlight. Now in days automobiles don't have any effective steering controlled headlight mechanism. that's why more accidents take place during night times in curve sections. The accidents can be avoided by incorporating the steering controlled headlight mechanism. This mechanism modify its lighting pattern while travelling turning of road or curvature of road. By using rack and pinion steering gear mechanism spur gear bevel gear mechanism. When steering wheel rotated and rotary motion is converted to translatory motion through the rack and pinion mechanism. The objective of this work is to controlled the headlight when steering wheel is rotated the result used as a rack and pinion arrangement which give drive the optical axes on which headlight are mounted so when tie rod arms moved with steering arm that give motion to the wheel as well as headlight. When steering wheel rotate the headlights move the same path and light is focused on curv area. Steering controlled headlight mechanism is helps to improve the drivers visibility at night time left or right as per requirement along with the turn and can help to reduce the accidents at night times. To great importance to use available mechanism to contribute the road safety by improving the steering controlled headlight mechanism.

Keywords- Headlight, Bevel gear, Rack and pinion

ARTICLE INFO

Article History

Received: 26th May 2017

Received in revised form :

26th May 2017

Accepted: 29th May 2017

Published online :

29th May 2017

I. INTRODUCTION

As the automobile industry developed over the years, there was a great increase in the number of vehicles resulting in the increase in the number of road accidents. Road accidents at night time are more serious and result in more fatalities. In the research, we found that approximately 60% - 70% fatal vehicle pedestrian accidents take place at night time Poor visibility or improper illumination of the roads at road corners, curves and of surrounding area results in accidents. The main cause of most of the accidents occurring at night time is generally the driver fails to see the obstacle or the pedestrian and react in time or apply brakes in time. With the increase in human age the light requirement to the eyes also increases. A youngsters' or an adults' eye requires more light compared to a child to do a same task. Therefore, proper illumination is a very important task.

The headlamps play a very crucial and major role in the driver's visibility and safe driving. Headlamp assembly in automobiles serves two major functions a) housing the headlamps and b) projecting the light with a standard pattern by reflectors so as not to cause glare. The fixed lighting pattern of the headlamps create blind spots at the road corners while turning and it also limits the drivers sight to the emitted light beam range.

on this, the AFS system has come into being. Adaptive front-lighting system (AFS) is an active driving safety enhancing system which can automatically change or adjust headlamps for different external conditions or factors such as road conditions, driving conditions and weather conditions etc. AFS relies on rack and pinion with bevel gear attachment to give the direction to the headlamp systems that used in mechanism. Headlamps with AFS illuminate the curve of the road when the vehicle. is turning

at the curved road. Comparison of headlamp light distribution patterns with AFS and without AFS shows that the headlamp without the AFS do not make the full curved road illuminated which blocks the driver from detecting any pedestrian in the way of the vehicle. The headlamp with AFS is able to illuminate the curved road fully which as a result does not block the driver from detecting the pedestrian in the way of the vehicle. Therefore timely detection of the pedestrian leads to timely avoid any accidents or collision at the curved road.

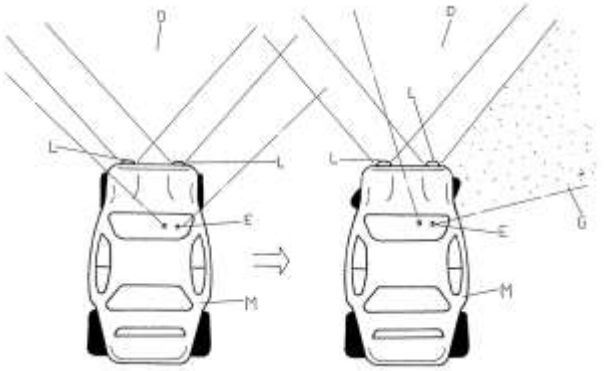

Fig-1 Normal Headlight

Road accidents are human tragedy. They involve high human suffering and monetary cost in terms of untimely deaths, injuries and loss of potential income. Road safety is an issue of national concern, considering its magnitude and gravity and the consequent.

II. PROBLEM STATEMENT

The major problem hindering safer and more comfortable driving is the driver and his/her limited reaction time in the presence of changing road conditions. An aim of development in active safety is to reduce the reaction time of the driver by improving visibility and thus achieve a significant increase in road safety and driving comfort. Alexander and Lunen Feld mentioned that driving an automobile primarily a visual task because vision contributes as much as 90% of the information needed to drive. Good visibility contributes to driver confidence and enables more relaxed and safer driving. Moreover, statistics clearly show that the majority of accidents take place at night or in bad weather because of low visual conditions. Under such conditions, or in bad weather, drivers have difficulty in being able to see traffic control devices, lanes, other vehicles, pedestrians, animals, and other potential hazards. Studies show that visual perception, with which we absorb 90 % of all relevant traffic information, is reduced to as little as four percept during foggy or rainy nights. Furthermore, according to Germany's Federal Statistics Bureau, more than 40 % of all automobile accidents resulting in death occur at night, despite the fact that there is up to 80 % less traffic on the road than during the day. Reduced vision increases reaction time which can have fatal consequences. Drivers rely on headlights in the dark and in bad weather for a clear view of the road and to illuminate possible hazards ahead. It is, therefore, of great importance to use available technology to contribute to road safety by improving the visual conditions provided by vehicle headlights. According to Börnchen et al appropriate solutions will be based on the mechatronic design concept and will incorporate components from heterogeneous fields such as lighting technology, mechanics, actuators, sensors, power electronics and system control.

III. OBJECTIVE OF PROJECT

The main aim to move the head light on sharp turning as possible as. The vehicle should get illumination front view that could help to driver taking turn on hill areas, And also to make the nation with an accident free.

• To investigate the lighting conventional system and mechanism in automobiles.

• To design and develop an Adaptive Lighting System to be implemented in automobiles.

• To propose a lighting system that can be commercialized for the types of Transportation

•To provide the nation with an accident free roads.

•To manufacture a Low Cost Automation Project.

IV. SCOP OF PROJET

Adaptive headlights are an active safety feature designed to make driving at night or in low-light conditions safer by increasing visibility around curves and over hills. When driving around a bend in the road, standard headlights continue to shine straight ahead, illuminating the side of the road and leaving the road ahead of you in the dark. Adaptive headlights, on the other hand, turn their beams according to your steering input so that the vehicle's actual path is lit up. It's difficult for driver to see the road ahead and for oncoming motorists to see the driver approaching. In adaptive headlights mechanism steering control use for moving the light beam right or left, according to the position of the vehicle. Adaptive headlights can be implemented in two ways

1) Mechanical system
2) Mechatronic system

Mechanical system

In this system two headlights are mounted on bevel gear, which are mechanically operated by a steering through rack and pinion mechanism. The linkage is connected to stub axle from where it receives motion of the wheels. This motion is transmitted to headlights through rack and pinion to bevel gear.

V. COMPONANT OF SYSTEM

a) Rack and pinion steering mechanism

Rack and pinion systems give a much better feel for the driver, and there isn't the slop or slack associated with steering box pitman arm type systems. In a rack and pinion system, the track rod is replaced with the steering rack which is a long, toothed bar with the tie rods attached to each end.On the end of the steering shaft there is a simple

pinion gear that meshes with the rack. When you turn the steering wheel, the pinion gear turns, and moves the rack from left to right. Changing the size of the pinion gear alters the steering ratio. It really is that simple. The diagrams here show an example rack and pinion system (left) as well as a close-up cutaway of the steering rack itself (right).

Fig2. Steering rack and pinon

b) Rack and pinion attachment to the tie rod Rack and pinion is attached to tie rod for reciprocating motion of tie to rotary motion. Rack pinion and bevel pinion both having same pitch diameter for same rotary motion transfer to bevel gear.

Fig3. Rack And Pinion attached to tie rod

c) Bevel gear for headlight rotation

For selection of bevel gear we can find out the outer diameter by using formula,

$$r = l*360 / 2\pi\theta$$

where,

r= radius of bevel gear

θ=headlight rotation angle on bevel gear

l= reciprocating length of tie rod

Fig4. Bevel gear and head light

VI. METHODOLOGY

Adaptive front light system will modify its lightning pattern while travelling turning of road or curvature of road. It will enhance the night visibility for drivers in night time.

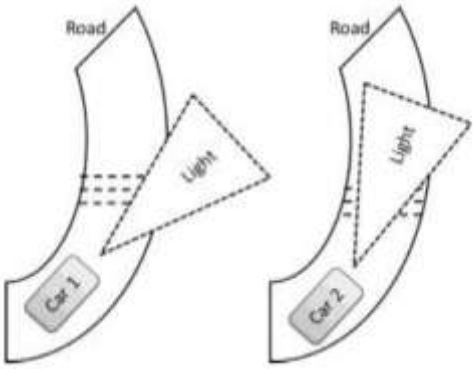

Fig5(a)- Car 1 without mechanism Fig5(b)- Car 2 with mechanism

Adaptive front light system therefore improves driver's visibility during night driving by automatically turning the headlamp in the direction of travel according to steering wheel angle and the distance between two vehicles.

Fig6. actual assembly of mechanism

VII.RESULT

We observed that when the steering wheel is rotated through a certain angle towards right side of the driver, the head lights are tilted through certain angle between 0-60 degrees to the right with the help of rack pinon and bevel gear arranged with respect to the steering wheel which were discussed earlier. The same features are observed when the steering wheel is turned to the left side.The results that we have achieve with mechanically actuated steering controlled head lights is pictorially represented as shown in figures.

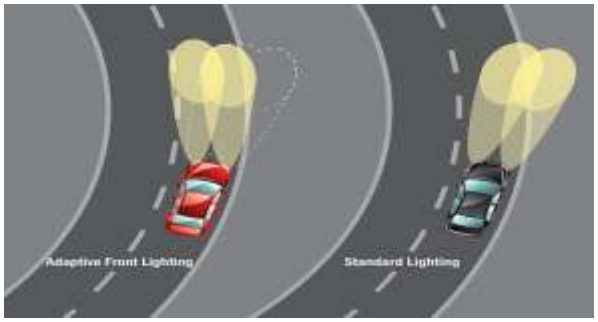

Fig7. Before and After installing mechanism

VIII. CONCLUSION

In the view of forgoing disadvantages inherent in the known types of road tracking headlamps now present in the prior art, the present invention provides a new movable vehicle head light construction wherein the same can be utilized for automatically aiming the head lamps in the same direction of the travel regardless of the terrain of the road. The further object of the system is, this is susceptible of a low cost of manufacturing with regard to both cost and labor and which accordingly is then susceptible of low prices of sale to the public.So there by making such movable vehicle head lamps which are economically low to available to the public.

REFERNCES

1. Meftah Hrairi and Anwar B. Abu Bakar, “Development of an Adaptive Headlamp Systems”, International Conference on Computer and Communication Engineering (ICCCE 2010), 11- 13 May 2010, Kuala Lumpur.

2. Ms. Monal Giradkar and Dr. Milind Khanapurkar, “Design & Implementation of Adaptive Front Light Systems of Vehicle Using FPGA based Lin Controller”, 2011 Forth International Conference on Emerging Trends in Engineering & Technology.

3. C K Chan, K.W.E Cheng, S. L. Ho and T. M. Fung, “ Development of Electric Vehicle with Advanced Lighting System and All Electric Drive”, International Conference on Power Electronics Systems and Applications(PESA 2009).

4.Michael J.Barnes and Speak; Adjustable headlight, headlight adjusting and direction sensing control system and method of adjusting head lights ; patent no; US5868488 A, 9 feb 1999.

5. Chian-yin Tseng; Direction adjustable device for an automobile with a steering linkage: Patent no. US6767119 B2, 27 jul 2004.

6. Chion-Dong Lin; steering wheel controlled car light piloting system, Patent no. US5416465 A; 16 may 1995.

7. Jean Cadiou; steering responsive control device for turning automotive headlamps;Patent no.US3947680 A, 30 mar 1976.

